Contents

Model

50CLU6.75S
50CLU6.75
50CLU61.5S
50CLU61.5
80CLMU61.5S
80CLMU61.5
80CLU62.2S
80CLMU62.2S
80CLU63.7S
80CLMU63.7S
100CLU61.5S
100CLU61.5
100CLU62.2S
100CLU63.7S
100CLMU63.7S

Section	Page
Specifications	1402
Selection Chart	1403
Performance Curves	1404
Dimensions	1410
Sectional View	1416
QDC Information	1900
Motor Data motor electrical specifications cable data wiring diagrams motor electrical data	2000

Model Designation

100 CL U 6 1.5 S 2

DISCHARGE SIZE – mm
- 50mm – 2"
- 80mm – 3"
- 100mm – 4"

MODEL TYPE
- CL– submersible sewage pump

GEOGRAPHIC DESIGNATION
- U – U.S.A. market

HERTZ
- 6 – 60

RATED KW
- .75 – 1HP
- 1.5 – 2HP
- 2.2 – 3HP
- 3.7 – 5HP

PHASE
- S – single phase
- none – three phase

VOLTAGE
- 2 - 208/230
- 4 - 460

Model CLU — EBARA PRO Cast Sewage Pumps

Specifications

	Standard	Optional
Size	2, 3, 4 inch	
Range of HP	1 to 2 HP Three Phase 1 to 5 HP Single Phase 2.5 HP available in FM (CF)	
Range of Performance	Capacity 13 to 430 GPM Head 9 to 66 feet	
Limitation		
Maximum Water Temperature	104°F (40°C) for 3 to 5 HP	
Synchronous Speed	1800 RPM	
Materials		
Casing	Cast Iron	
Impeller	Cast Iron	
Shaft	403 Stainless Steel	
Motor Frame	Cast Iron	
Fastener	304 Stainless Steel	
Mechanical Seal	Double Mechanical Seal	
Material – Upper Side	Carbon/Ceramic	
Material – Lower Side	Silicon Carbide/Silicon Carbide	
Impeller Type	Semi-open	
Bearing	Prelubricated Ball Bearing	
Motor	Air-filled, Insulation Class F	
Single Phase	208/230V	
Three Phase	208/230/460V	
Service Factor	1.15	
Motor Protection Single Phase Three Phase	Built-in Auto Cut - overload, out of phase, single phasing protection	
Accessories	Submersible cable 33 ft.	66 ft. QDC System

Selection Chart

Single Phase

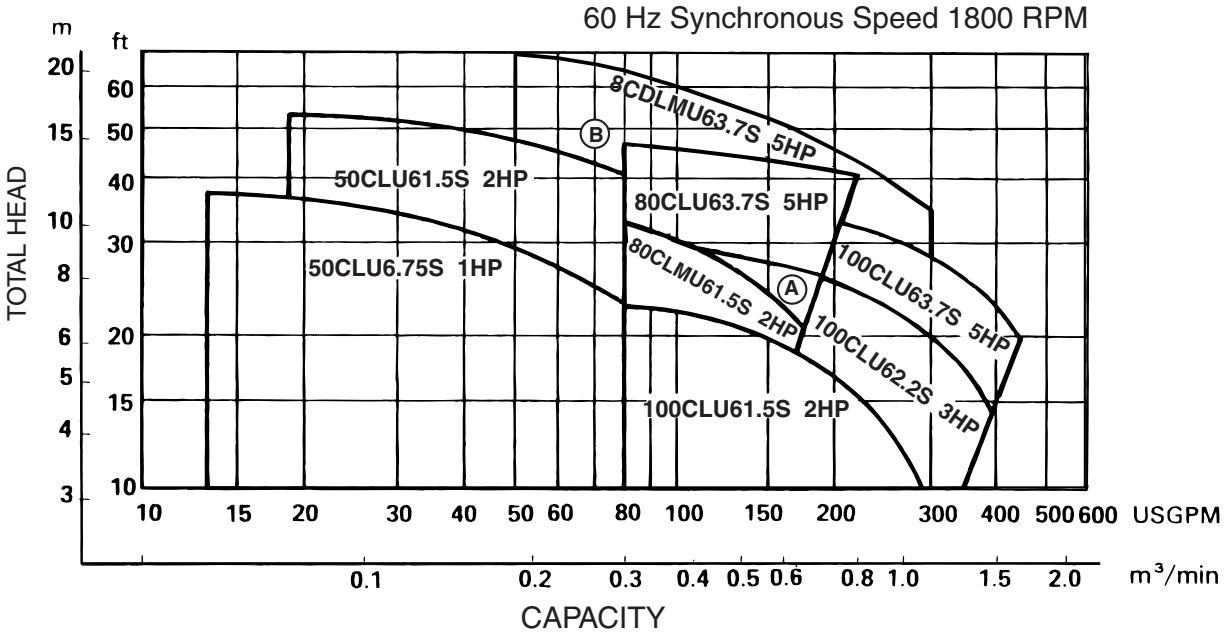

Ⓐ 80CLU62.2S 3HP

Ⓑ 80CLMU62.2S 3HP

Three Phase

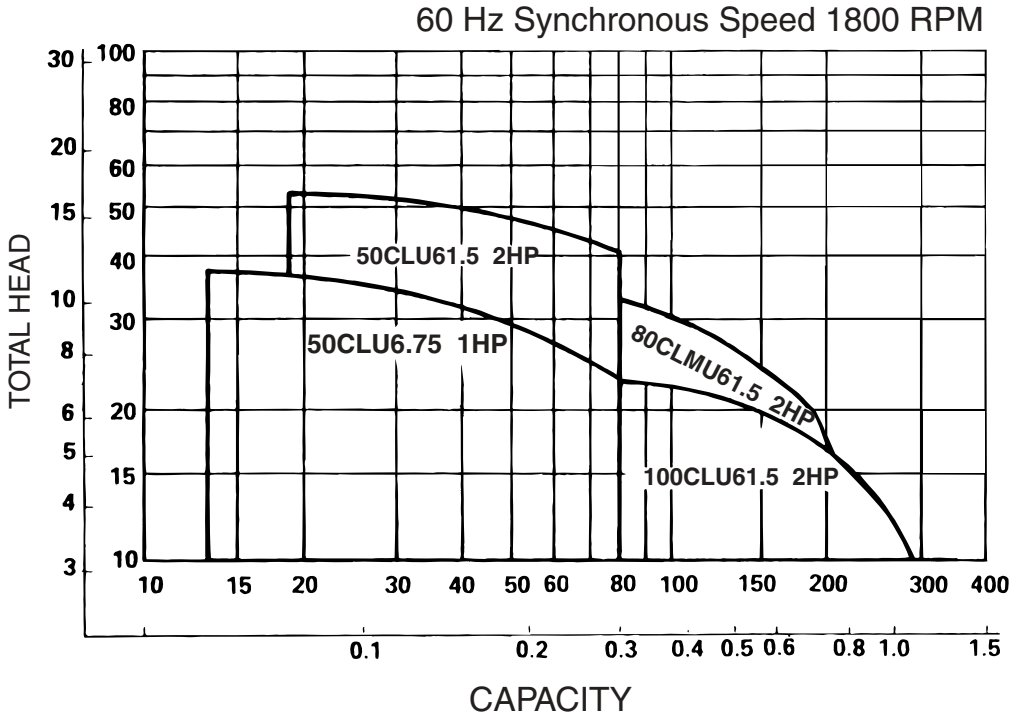

Model CLU — EBARA PRO Cast Sewage Pumps

Performance Curves

50CL6.75S 50CL6.75 (1HP) Synchronous Speed: 1800 RPM — 2 inch Discharge

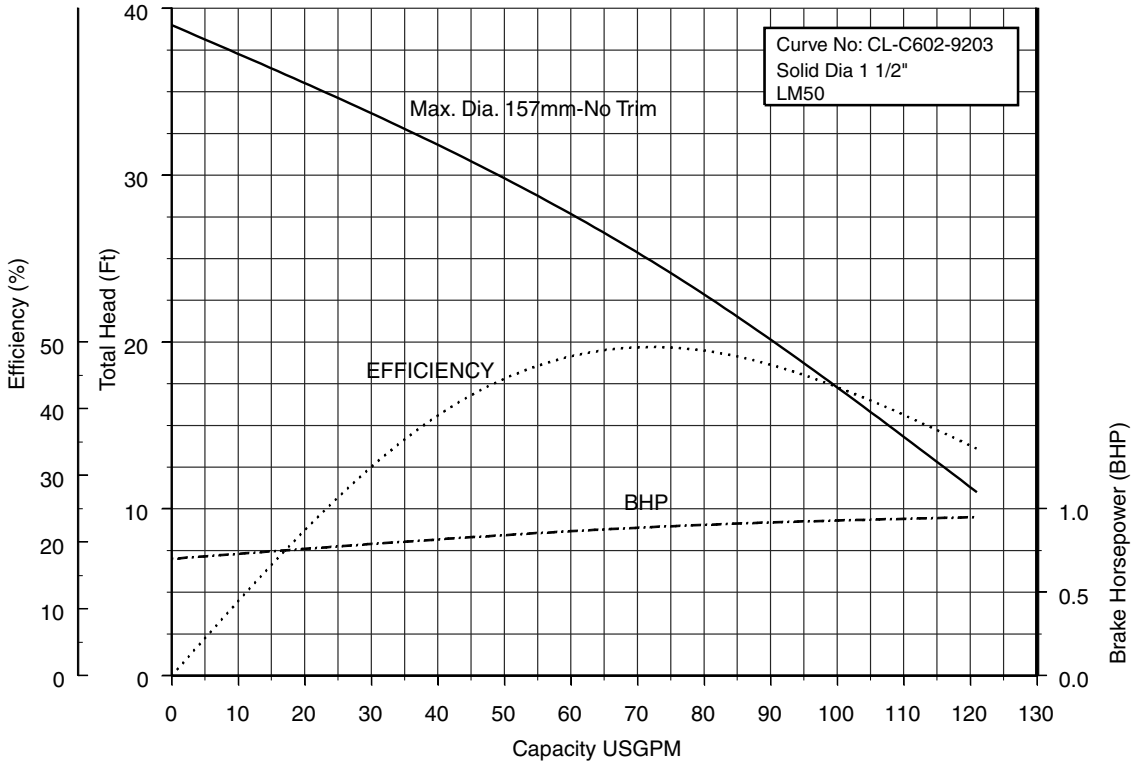

50CL61.5S 50CL61.5 (2HP) Synchronous Speed: 1800 RPM — 2, 3 inch Discharge

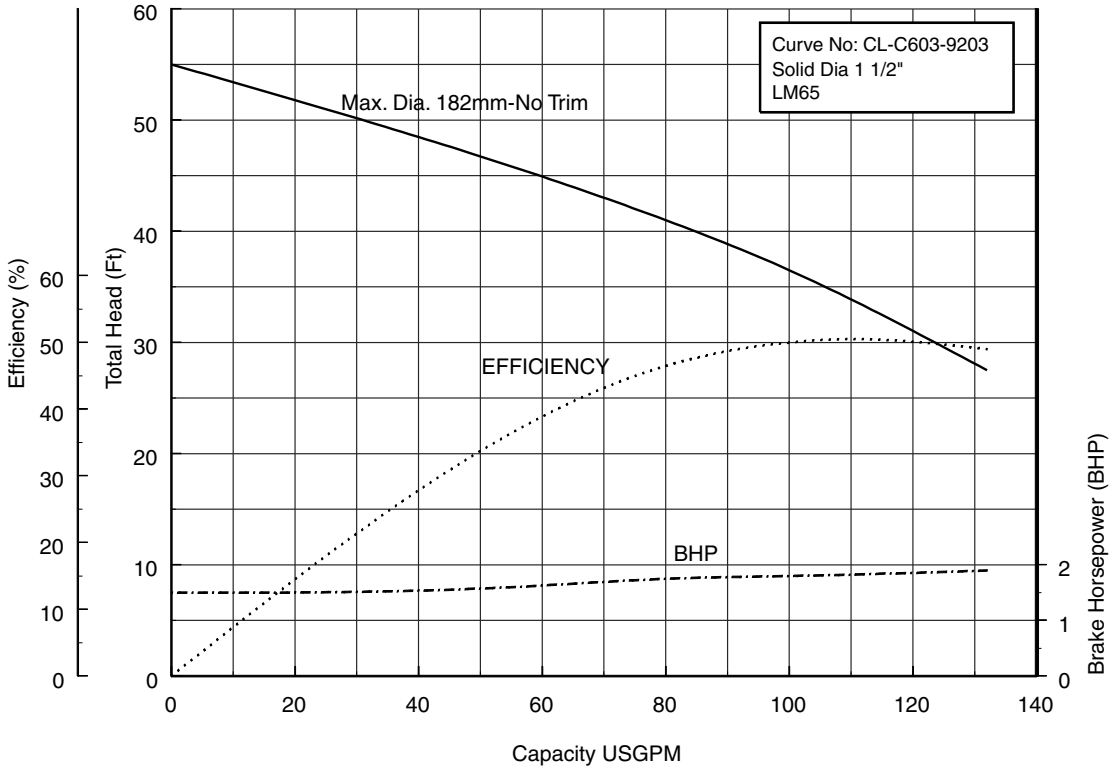

Performance Curves

80CLM61.5S 80CLM61.5 (2HP) Synchronous Speed: 1800 RPM 3, 4 inch Discharge

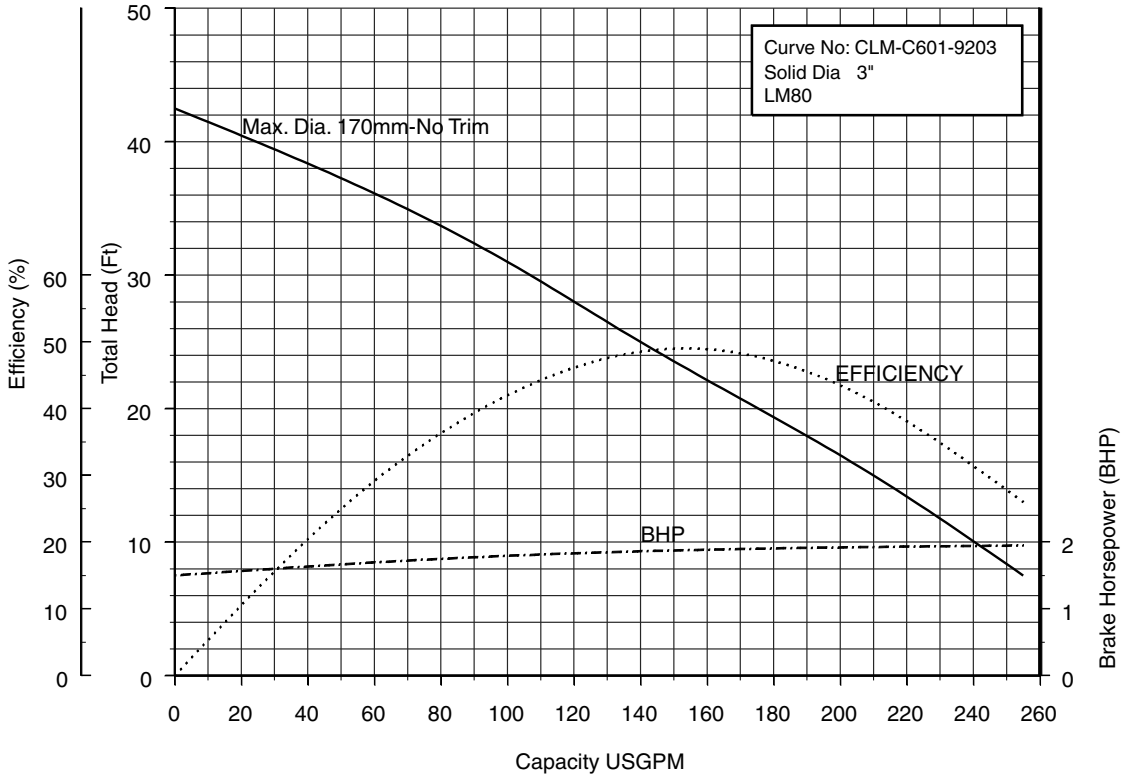

80CL62.2S (3HP) Synchronous Speed: 1800 RPM 3, 4 inch Discharge

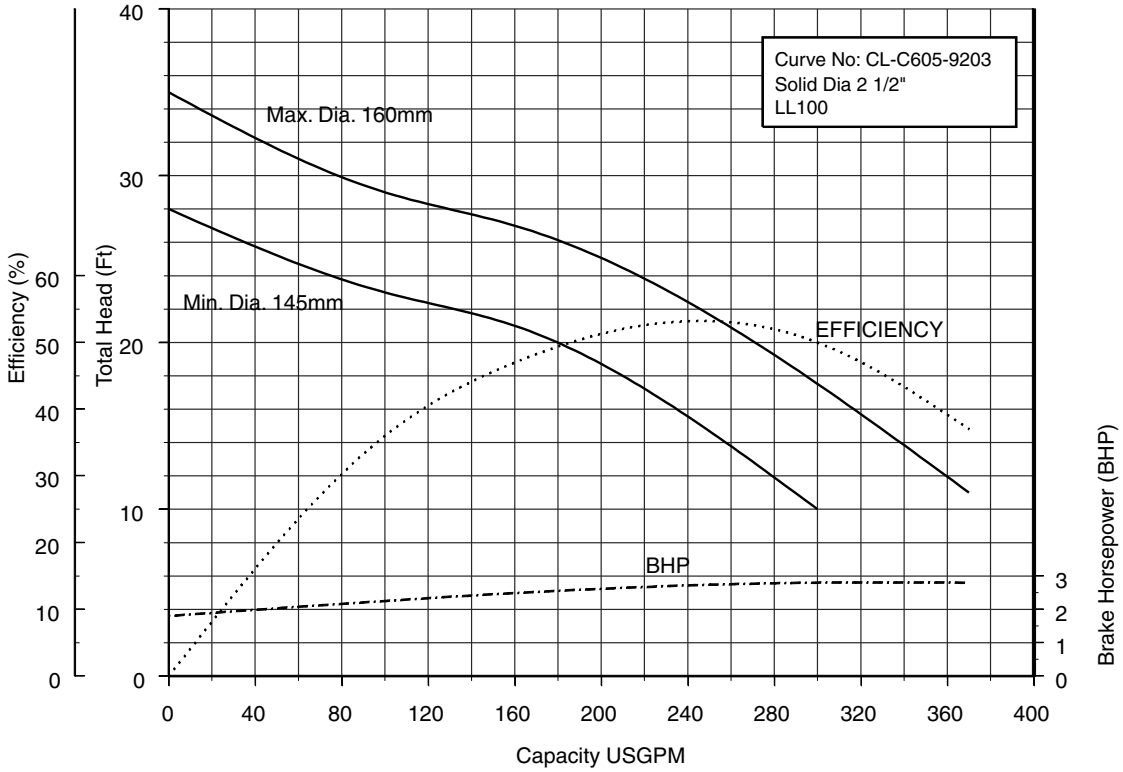

Model CLU — EBARA PRO Cast Sewage Pumps

Performance Curves

80CLM62.2S (3HP) Synchronous Speed: 1800 RPM — 3, 4 inch Discharge

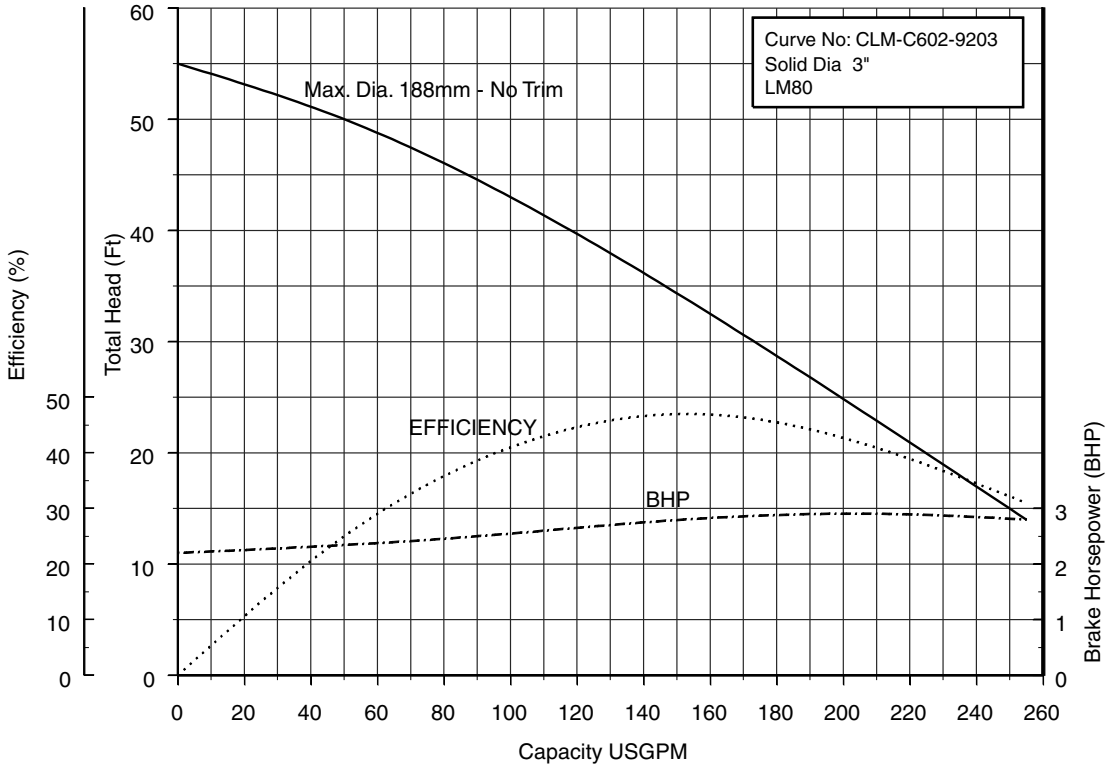

80CL63.7S (5HP) Synchronous Speed: 1800 RPM — 3, 4 inch Discharge

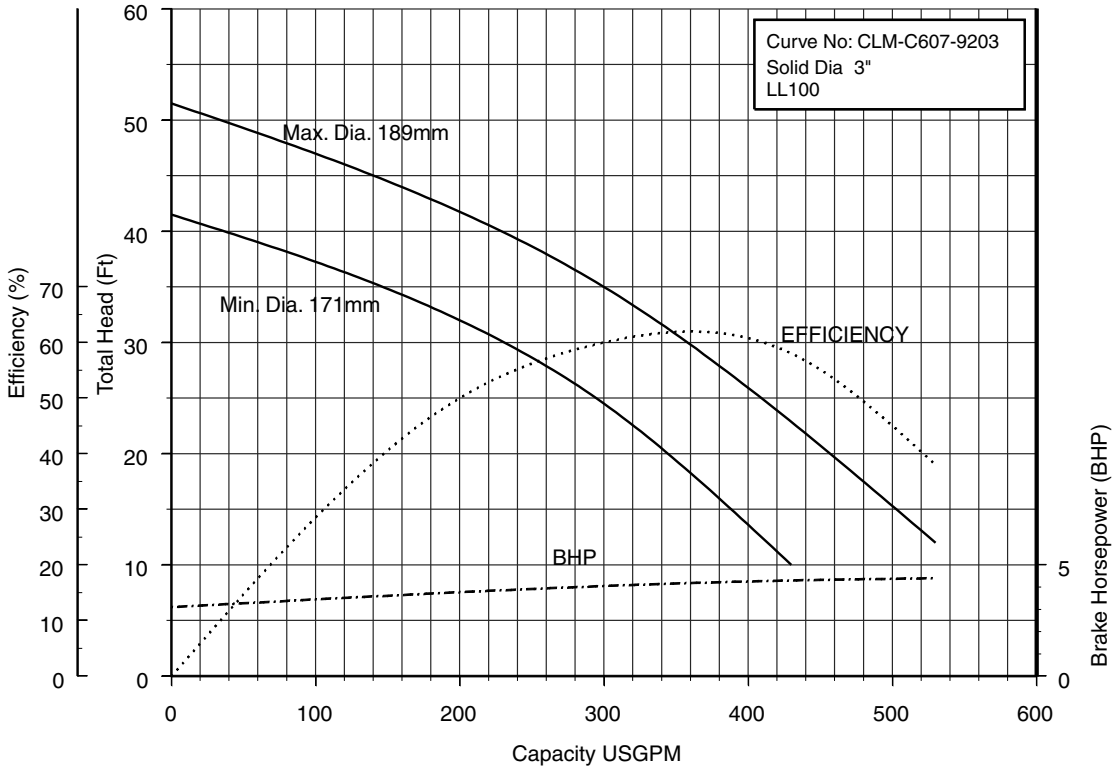

Model CLU — EBARA PRO Cast Sewage Pumps

Performance Curves

80CLM63.7S (5HP) Synchronous Speed: 1800 RPM — 3, 4 inch Discharge

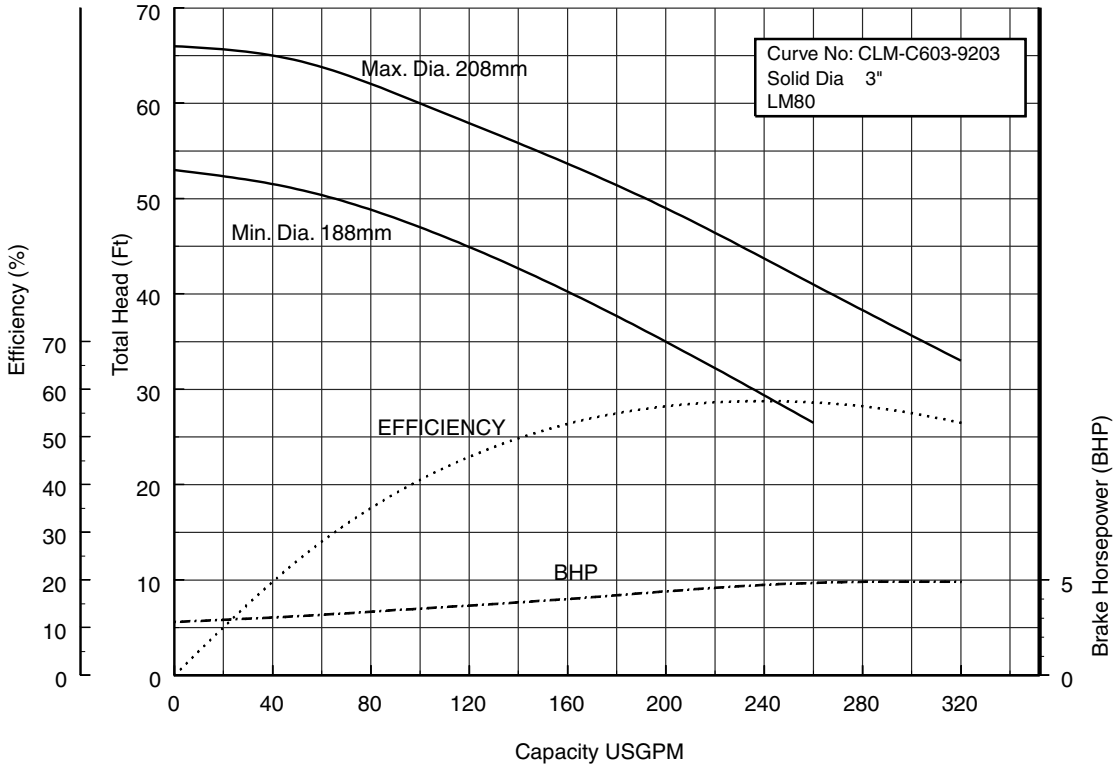

100CL61.5S 100CL61.5 (2HP) Synchronous Speed: 1800 RPM — 3, 4 inch Discharge

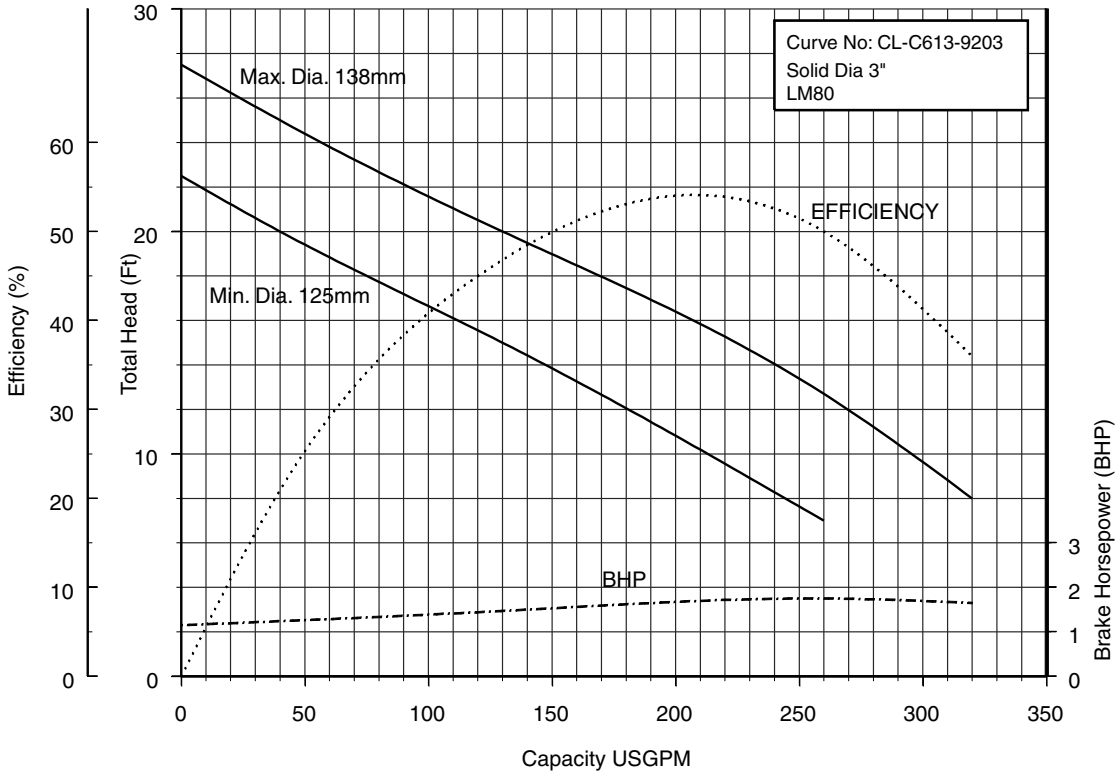

Contents

100CL62.2S (3HP) Synchronous Speed: 1800 RPM — 3, 4 inch Discharge

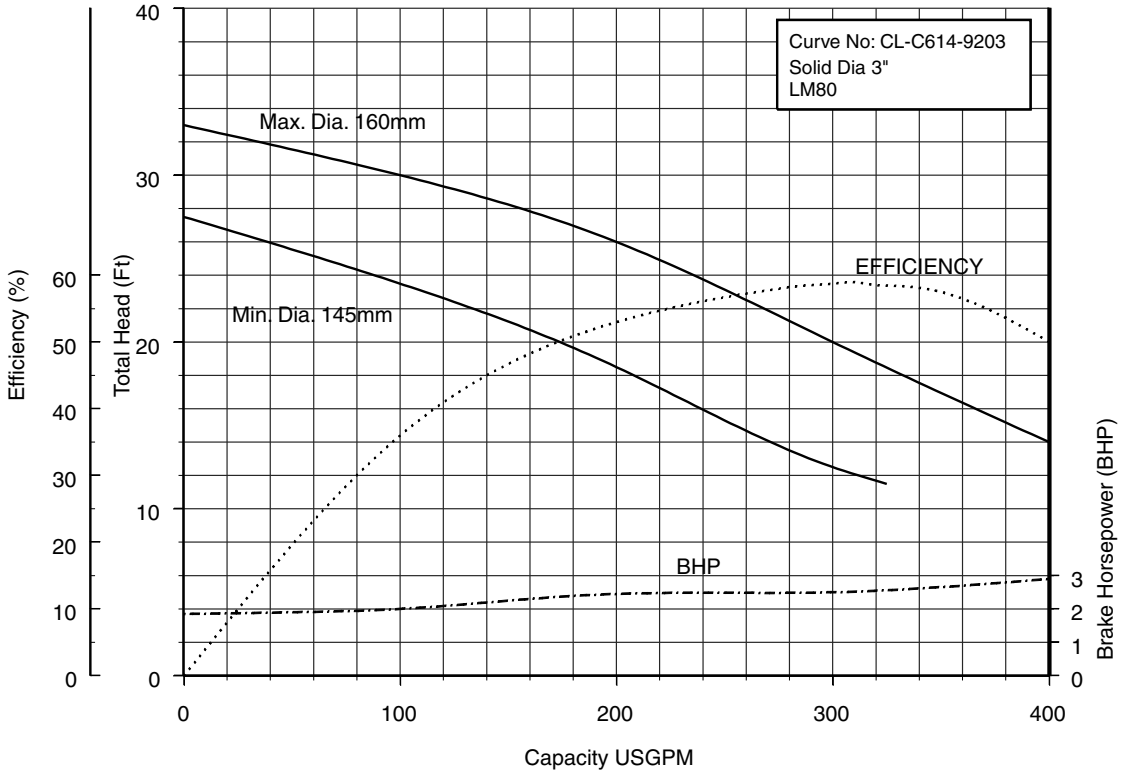

100CL63.7S (5HP) Synchronous Speed: 1800 RPM — 3, 4 inch Discharge

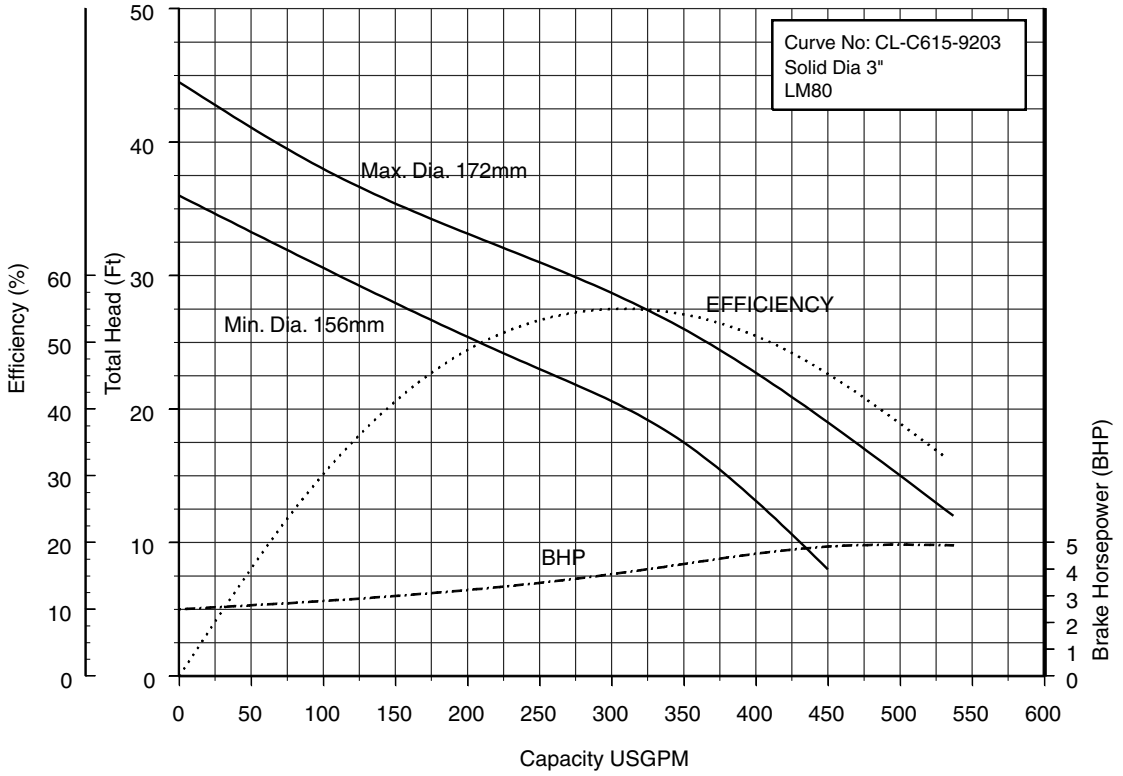

Model CLU — EBARA PRO Cast Sewage Pumps

Performance Curves

100CLM63.7S (5HP) Synchronous Speed: 1800 RPM — 3, 4 inch Discharge

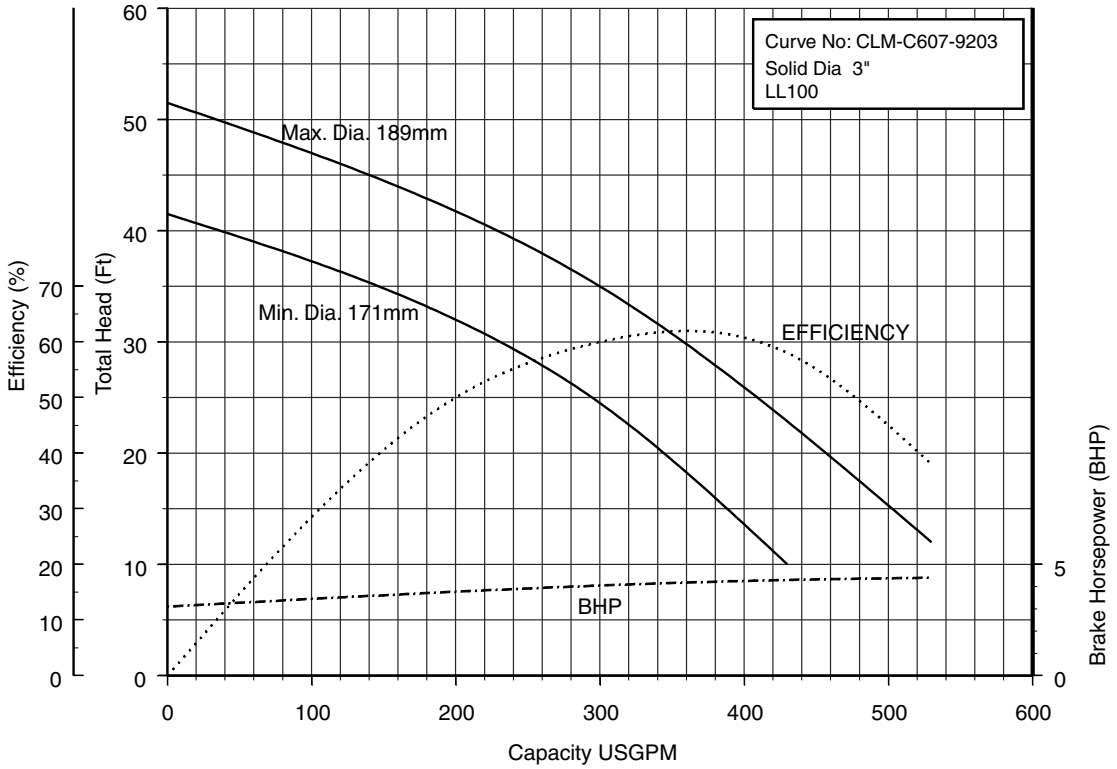

Dimensions

Model CLU, Single and Three Phase

50CLU, 1 to 2HP
80CLU, 2 to 5 HP
100CLU, 2 to 5HP

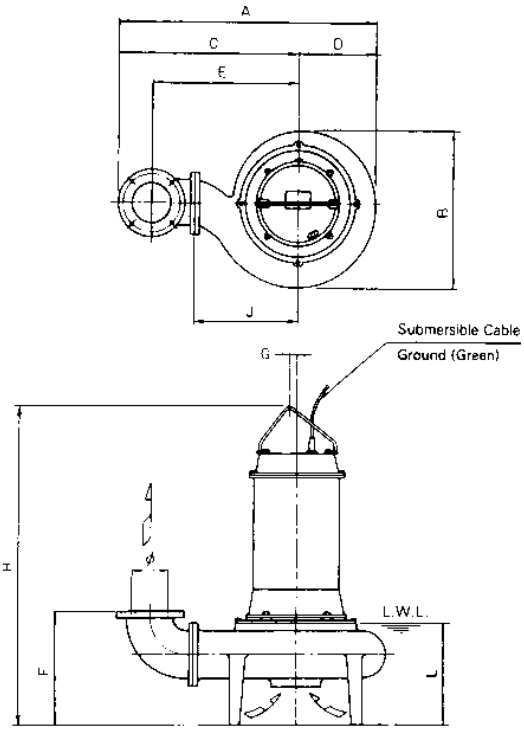

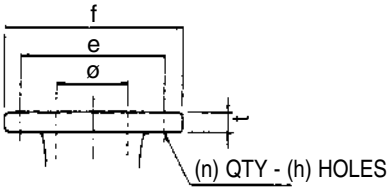

Flange (ANSI 125 PSI F.F)

inch

ø	e	f	t	n	h
2	4 3/4	6	5/8	4	3/4
3	6	7 1/2	3/4	4	3/4
4	7 1/2	9	15/16	8	3/4

mm

ø	e	f	t	n	h
50	121	152	16	4	19
80	152	191	19	4	19
100	191	229	24	8	19

Dimensions: inch

PHASE	SIZE ø	MODEL	OUTPUT kW	OUTPUT HP	PUMP & MOTOR A	B	C	D	E	F	G	H	J	L	WEIGHT Lb
SINGLE	2	50CLU6.75S	0.75	1	15 1/2	8 3/4	11 1/8	4 5/16	8 1/16	6 7/8	1	21 5/16	5 7/8	5 1/2	77
	2/3	50CLU61.5S	1.5	2	18 3/16	10 3/16	12 5/8	5 1/16	9 5/8	7 7/8	13/16	22 11/16	7 1/16	6 5/16	97
	3/4	80CLU61.5S	1.5	2	20 7/16	11 1/2	15	5 3/4	11 1/4	8 11/16	13/16	23 1/2	8 1/4	7 1/8	112
		80CLU62.2S	2.2	3	23 13/16	13 3/16	17 3/16	6 5/8	13 3/8	9 13/16	13/16	28 3/8	9 1/4	8 1/8	170
		80CLU63.7S	3.7	5	23 13/16	13 3/16	17 3/16	6 5/8	13 3/8	9 13/16	13/16	30 3/16	9 1/4	8 1/8	176
		100CLU61.5S	1.5	2	21 13/16	10 1/2	16 9/16	5 1/4	12	10 13/16	13/16	24 15/16	7 7/8	8 9/16	134
		100CLU62.2S	2.2	3	22 7/8	11 1/8	17 5/16	5 9/16	12 13/16	10 13/16	1	28 15/16	8 11/16	8 11/16	159
		100CLU63.7S	3.7	5	22 7/8	11 1/8	17 5/16	5 9/16	12 13/16	10 13/16	1	30 3/4	8 11/16	8 11/16	183
		100CLMU63.7S	3.7	5	24 9/16	13 3/16	17 15/16	6 5/8	13 3/8	9 13/16	5/16	31 13/16	9 1/4	8 1/16	209
THREE	2	50CLU6.75	0.75	1	15 1/2	8 3/4	11 1/8	4 5/16	8 1/16	6 7/8	1	22 1/16	5 1/2	5 1/2	73
	2/3	50CLU61.5	1.5	2	18 3/16	10 3/16	12 5/8	5 1/16	9 5/8	7 7/8	13/16	26 1/16	7 1/16	6 5/16	106
	3/4	80CLU61.5	1.5	2	20 7/16	11 1/2	15	5 3/4	11 1/4	8 11/16	13/16	26 7/8	8 1/4	7 1/8	121
		100CLU61.5	1.5	2	21 13/16	10 1/2	16 9/16	5 1/4	12	10 13/16	13/16	28 5/16	7 7/8	8 9/16	143

Dimensions: mm

PHASE	SIZE ø	MODEL	OUTPUT kW	OUTPUT HP	PUMP & MOTOR A	B	C	D	E	F	G	H	J	L	WEIGHT kg
SINGLE	50	50CLU6.75S	0.75	1	393	222	283	110	205	175	25	542	150	140	35
	50/80	50CLU61.5S	1.5	2	462	258	321	129	245	200	20	576	180	160	44
	80/100	80CLU61.5S	1.5	2	519	292	381	146	285	220	20	597	210	181	51
		80CLU62.2S	2.2	3	605	335	436	169	340	250	20	721	235	206	77
		80CLU63.7S	3.7	5	605	335	436	169	340	250	20	767	235	206	80
		100CLU61.5S	1.5	2	554	267	420	134	305	275	20	633	200	217	61
		100CLU62.2S	2.2	3	581	282	440	141	325	275	25	735	220	220	72
		100CLU63.7S	3.7	5	581	282	440	141	325	275	25	781	220	220	83
		100CLMU63.7S	3.7	5	624	335	455	169	340	250	8	808	235	205	95
THREE	50	50CLU6.75	0.75	1	393	222	283	110	205	175	25	561	140	140	33
	50/80	50CLU61.5	1.5	2	462	258	321	129	245	200	20	662	180	160	48
	80/100	80CLU61.5	1.5	2	519	292	381	146	285	220	20	683	210	181	55
		100CLU61.5	1.5	2	554	267	420	134	305	275	20	719	200	217	65

Dimensions

Model CLU, Single and Three Phase

80CLMU, 2 to 5 HP

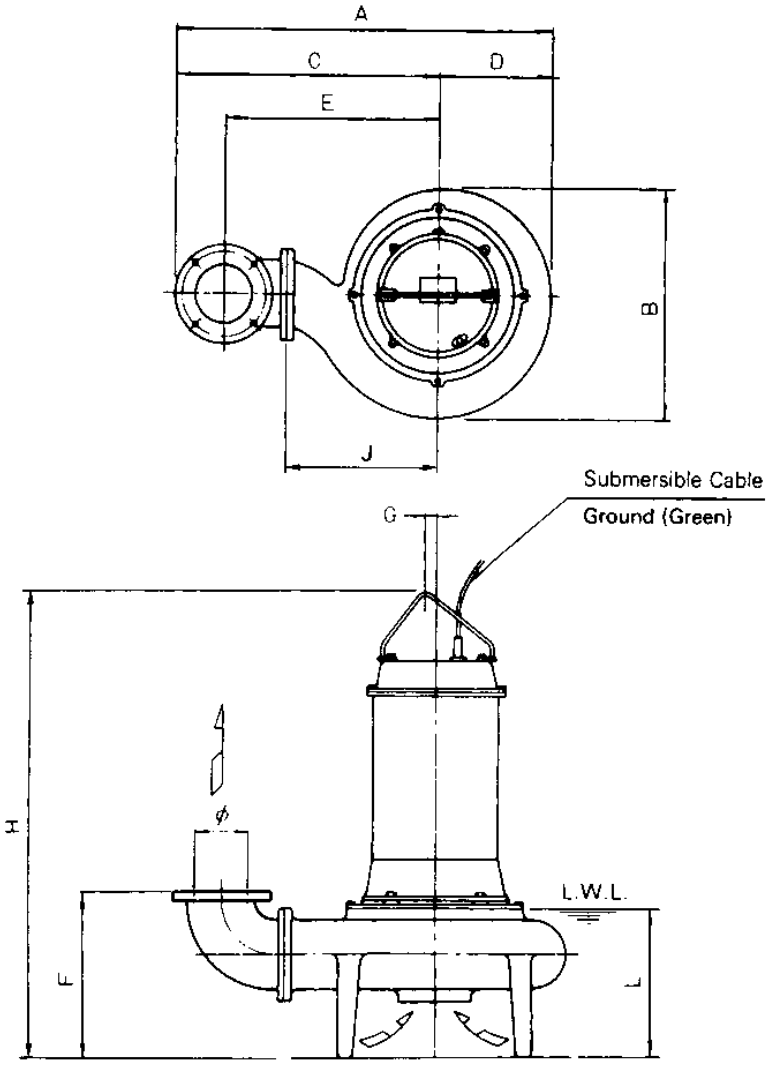

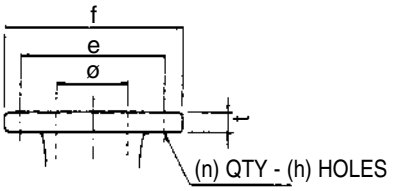

Flange (ANSI 125 PSI F.F)

inch

ø	e	f	t	n	h
3	6	7 1/2	3/4	4	3/4
4	7 1/2	9	15/16	8	3/4

mm

ø	e	f	t	n	h
80	152	191	19	4	19
100	191	229	24	8	19

Dimensions: inch

PHASE	SIZE ø	MODEL	OUTPUT		PUMP & MOTOR										WEIGHT Lb
			kW	HP	A	B	C	D	E	F	G	H	J	L	
SINGLE	3/4	80CLMU61.5S	1.5	2	20 7/16	11 1/8	14 7/8	5 9/16	11 1/4	8 11/16	13/16	23 1/2	8 1/4	7 1/8	121
		80CLMU62.2S	2.2	3	20 5/8	11 1/2	14 7/8	5 3/4	11 1/4	8 11/16	13/16	27 11/16	8 1/4	7 3/8	148
		80CLMU63.7S	3.7	5	21 5/16	12 1/8	15 1/4	6 1/16	11 5/8	8 11/16	13/16	29 7/16	8 11/16	7 3/8	172
THREE	3/4	80CLMU61.5	1.5	2	20 7/16	11 1/2	14 7/8	5 3/4	11 1/4	8 11/16	13/16	26 7/8	8 1/4	7 1/8	130

Dimensions: mm

PHASE	SIZE ø	MODEL	OUTPUT		PUMP & MOTOR										WEIGHT kg
			kW	HP	A	B	C	D	E	F	G	H	J	L	
SINGLE	80/100	80CLMU61.5S	1.5	2	519	282	378	141	285	220	20	597	210	181	55
		80CLMU62.2S	2.2	3	524	292	378	146	285	220	20	703	210	188	67
		80CLMU63.7S	3.7	5	542	308	388	154	295	220	20	748	220	187	78
THREE	80/100	80CLMU61.5	1.5	2	519	292	378	146	285	220	20	683	210	181	59

Dimensions

Model CLU with Quick Discharge Connector

50CLU, 1 to 2HP
80CLU, 2 to 5HP
100CLU, 2 to 5HP

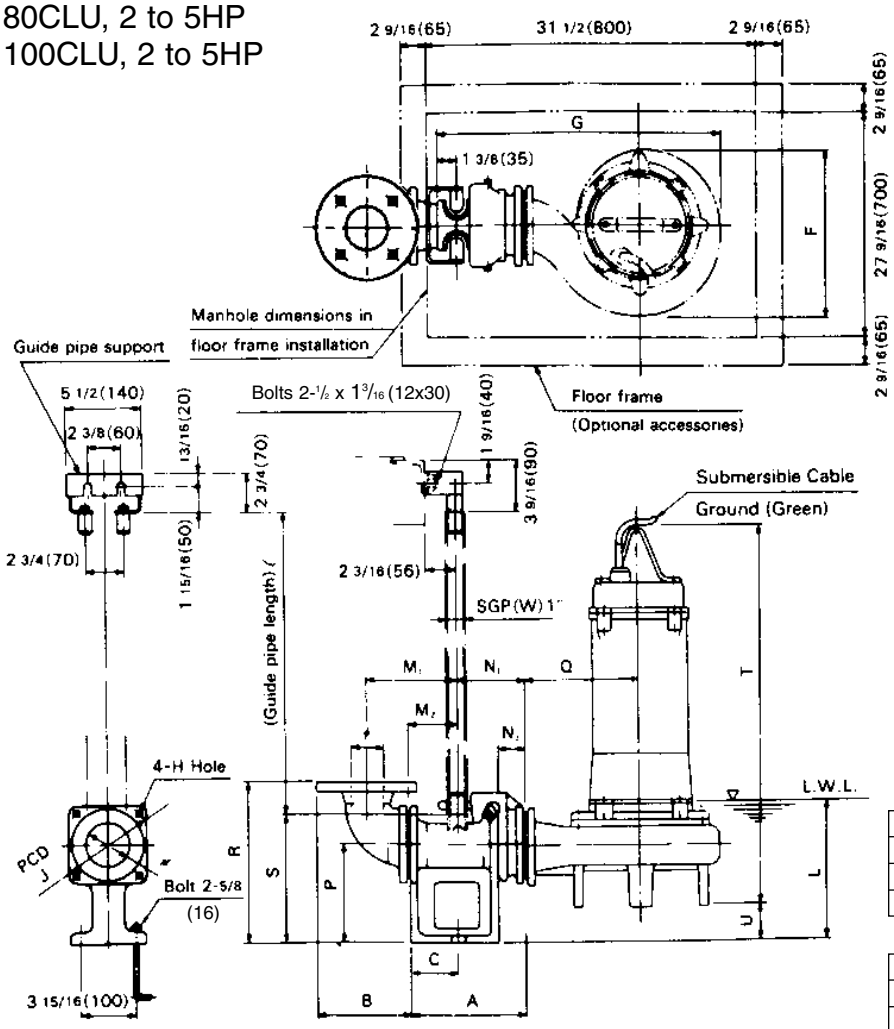

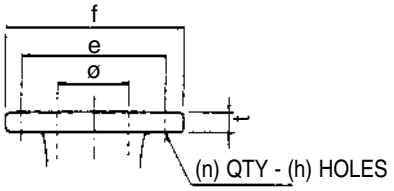

Flange (ANSI 125 PSI F.F)

inch

ø	e	f	t	n	h
2	4 3/4	6	5/8	4	3/4
3	6	7 1/2	3/4	4	3/4
4	7 1/2	9	15/16	8	3/4

mm

ø	e	f	t	n	h
50	121	152	16	4	19
80	152	191	19	4	19
100	191	229	24	8	19

Dimensions: inch

PHASE	SIZE ø	PUMP MODEL	OUTPUT kW	OUTPUT HP	QDC MODEL	QDC A	B	C	H	J	M1	M2	N1	N2	P	R	S	PUMP & MOTOR F	G	L	Q	T	U	WEIGHT Lb PUMP	WEIGHT Lb QDC
SINGLE	2	50CLU6.75S	0.75	1	LM50	7 11/16	5 1/4	3 1/8	1/2	4 3/4	5 5/16	3 1/8	4 1/2	1 9/16	5 5/16	9 1/16	6 1/2	8 3/4	16 1/8	7 11/16	5 7/8	21 5/16	2 3/16	77	24
	2/3	50CLU61.5S	1.5	2	LM65	8 7/16	6	3 3/4	1/2	5 1/2	6 5/16	3 3/4	4 3/4	1 3/4	5 11/16	9 13/16	7 1/2	10 3/16	18 1/4	8 1/4	7 1/16	22 11/16	1 15/16	97	31
	3/4	80CLU61.5S	1.5	2	LM80	8 7/16	6 5/8	3 9/16	9/16	6 1/8	6 1/2	3 9/16	4 15/16	1 15/16	6 7/8	11 1/4	9 1/16	11 1/2	20 1/8	9 11/16	8 1/4	23 1/2	2 9/16	112	37
		100CLU61.5S	1.5	2	LM80	8 7/16	8 1/4	3 9/16	9/16	6 1/8	7 11/16	3 9/16	4 15/16	1 15/16	6 7/8	11 13/16	9 1/16	10 1/2	19 7/16	9 1/2	7 7/8	24 15/16	1	134	37
		100CLU62.2S	2.2	3	LM80	8 7/16	8 1/4	3 9/16	9/16	6 1/8	7 11/16	3 9/16	4 15/16	1 15/16	6 7/8	11 13/16	9 1/16	11 1/8	20 1/2	9 5/8	8 11/16	28 15/16	1	159	37
		100CLU63.7S	3.7	5	LM80	8 7/16	8 1/4	3 9/16	9/16	6 1/8	7 11/16	3 9/16	4 15/16	1 15/16	6 7/8	11 13/16	9 1/16	11 1/8	20 1/2	9 5/8	8 11/16	30 3/4	1	183	37

Dimensions: mm

PHASE	SIZE ø	PUMP MODEL	OUTPUT kW	OUTPUT HP	QDC MODEL	QDC A	B	C	H	J	M1	M2	N1	N2	P	R	S	PUMP & MOTOR F	G	L	Q	T	U	WEIGHT kg PUMP	WEIGHT kg QDC
SINGLE	50	50CLU6.75S	0.75	1	LM50	195	133	80	12	120	135	80	115	40	135	230	165	222	410	195	150	542	55	35	11
	50/80	50CLU61.5S	1.5	2	LM65	215	153	95	12	140	160	95	120	45	145	250	190	258	464	210	180	576	50	44	14
	80/100	80CLU61.5S	1.5	2	LM80	215	168	90	15	155	165	90	125	50	175	285	230	292	511	246	210	597	65	51	17
		100CLU61.5S	1.5	2	LM80	215	210	90	15	155	195	90	125	50	175	300	230	267	494	242	200	633	25	61	17
		100CLU62.2S	2.2	3	LM80	215	210	90	15	155	195	90	125	50	175	300	230	282	521	245	220	735	25	72	17
		100CLU63.7S	3.7	5	LM80	215	210	90	15	155	195	90	125	50	175	300	230	282	521	245	220	781	25	83	17

Dimensions

Model CLU with Quick Discharge Connector

50CLU, 1 to 2HP
80CLU, 2HP
100CLU, 2HP

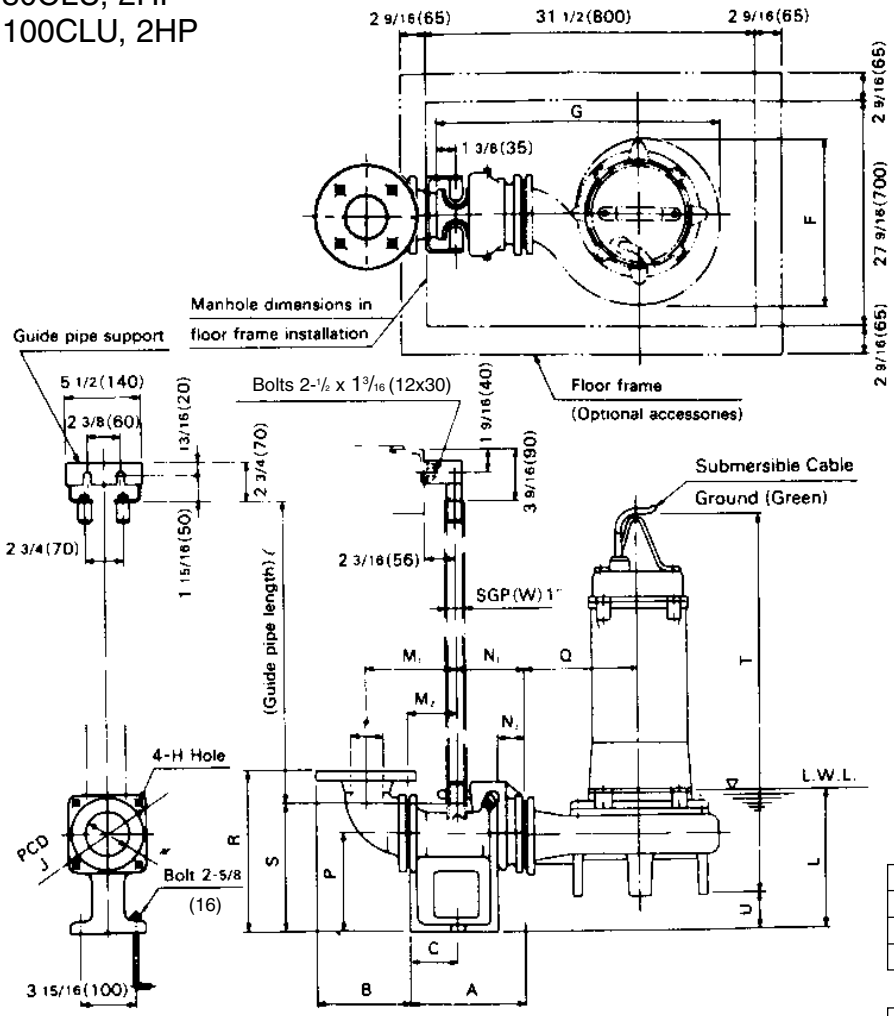

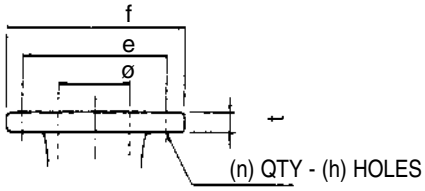

Flange (ANSI 125 PSI F.F)

inch

ø	e	f	t	n	h
2	4 3/4	6	5/8	4	3/4
3	6	7 1/2	3/4	4	3/4
4	7 1/2	9	15/16	8	3/4

mm

ø	e	f	t	n	h
50	121	152	16	4	19
80	152	191	19	4	19
100	191	229	24	8	19

Dimensions: inch

PHASE	SIZE ø	PUMP MODEL	OUTPUT kW	OUTPUT HP	QDC MODEL	QDC A	B	C	H	J	M_1	M_2	N_1	N_2	P	R	S	PUMP & MOTOR F	G	L	Q	T	U	WEIGHT Lb PUMP	WEIGHT Lb QDC
SINGLE	2	50CLU6.75	0.75	1	LM50	7 11/16	5 1/4	3 1/8	1/2	4 3/4	5 5/16	3 1/8	4 1/2	1 9/16	5 5/16	9 1/16	6 1/2	8 3/4	16 1/8	7 11/16	5 7/8	22 1/16	2 3/16	73	24
	2/3	50CLU61.5	1.5	2	LM65	8 7/16	6	3 3/4	1/2	5 1/2	6 5/16	3 3/4	4 3/4	1 3/4	5 11/16	9 13/16	7 1/2	10 3/16	18 1/4	8 1/4	7 1/16	26 1/16	1 15/16	106	31
	3/4	80CLU61.5	1.5	2	LM80	8 7/16	6 5/8	3 9/16	9/16	6 1/8	6 1/2	3 9/16	4 15/16	1 15/16	6 7/8	11 1/4	9 1/16	11 1/2	20 1/8	9 11/16	8 1/4	26 7/8	2 9/16	121	37
		100CLU61.5	1.5	2	LM80	8 7/16	8 1/4	3 9/16	9/16	6 1/8	7 11/16	3 9/16	4 15/16	1 15/16	6 7/8	11 13/16	9 1/16	10 1/2	19 7/16	9 1/2	7 7/8	28 5/16	1	143	37

Dimensions: mm

PHASE	SIZE ø	PUMP MODEL	OUTPUT kW	OUTPUT HP	QDC MODEL	QDC A	B	C	H	J	M_1	M_2	N_1	N_2	P	R	S	PUMP & MOTOR F	G	L	Q	T	U	WEIGHT kg PUMP	WEIGHT kg QDC
THREE	50	50CLU6.75	0.75	1	LM50	195	133	80	12	120	135	80	115	40	135	230	165	222	410	195	150	561	55	33	11
	50/80	50CLU61.5	1.5	2	LM65	215	153	95	12	140	160	95	120	45	145	250	190	258	464	210	180	662	50	48	14
	80/100	80CLU61.5	1.5	2	LM80	215	168	90	15	155	165	90	125	50	175	285	230	292	511	246	210	683	65	55	17
		100CLU61.5	1.5	2	LM80	215	210	90	15	155	195	90	125	50	175	300	230	267	494	242	200	719	25	65	17

Dimensions

Model CLU with Quick Discharge Connector, Single and Three Phase

80CLMU, 2 to 5 HP

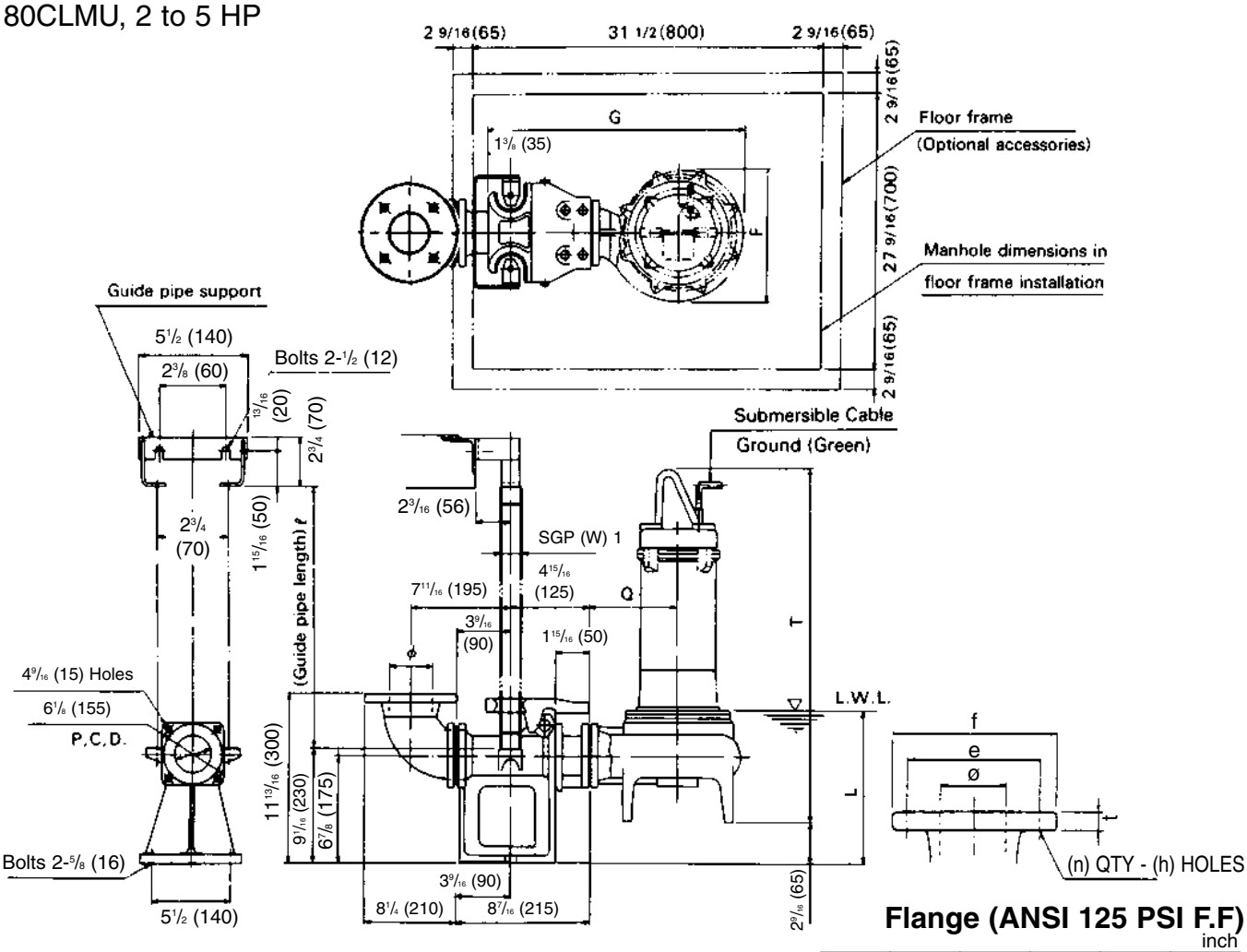

Flange (ANSI 125 PSI F.F)

inch

ø	e	f	t	n	h
3	6	7 1/2	3/4	4	3/4
4	7 1/2	9	15/16	8	3/4

mm

ø	e	f	t	n	h
80	152	191	19	4	19
100	191	229	24	8	19

Dimensions: inch

PHASE	SIZE ø	PUMP MODEL	OUTPUT		QDC MODEL	PUMP & MOTOR					WEIGHT Lb	
			kW	HP		F	G	L	Q	T	PUMP	QDC
SINGLE	3/4	80CLMU61.5S	1.5	2	LM80	11 1/8	20 1/8	9 11/16	8 1/4	23 1/2	121	37
		80CLMU62.2S	2.2	3	LM80	11 1/2	20 5/16	9 15/16	8 1/4	27 11/16	148	37
		80CLMU63.7S	3.7	5	LM80	12 1/8	21	9 15/16	8 11/16	29 7/16	172	37
THREE	3/4	80CLMU61.5	1.5	2	LM80	11 1/8	20 1/8	9 11/16	8 1/4	26 7/8	130	37

Dimensions: mm

PHASE	SIZE ø	PUMP MODEL	OUTPUT		QDC MODEL	PUMP & MOTOR					WEIGHT kg	
			kW	HP		F	G	L	Q	T	PUMP	QDC
SINGLE	80/100	80CLMU61.5S	1.5	2	LM80	282	511	246	210	597	55	17
		80CLMU62.2S	2.2	3	LM80	292	516	253	210	703	67	17
		80CLMU63.7S	3.7	5	LM80	308	534	252	220	748	78	17
THREE	80/100	80CLMU61.5	1.5	2	LM80	282	511	246	210	683	59	17

Dimensions

Model CLU with Quick Discharge Connector, Single Phase

80CLU, 3 to 5HP

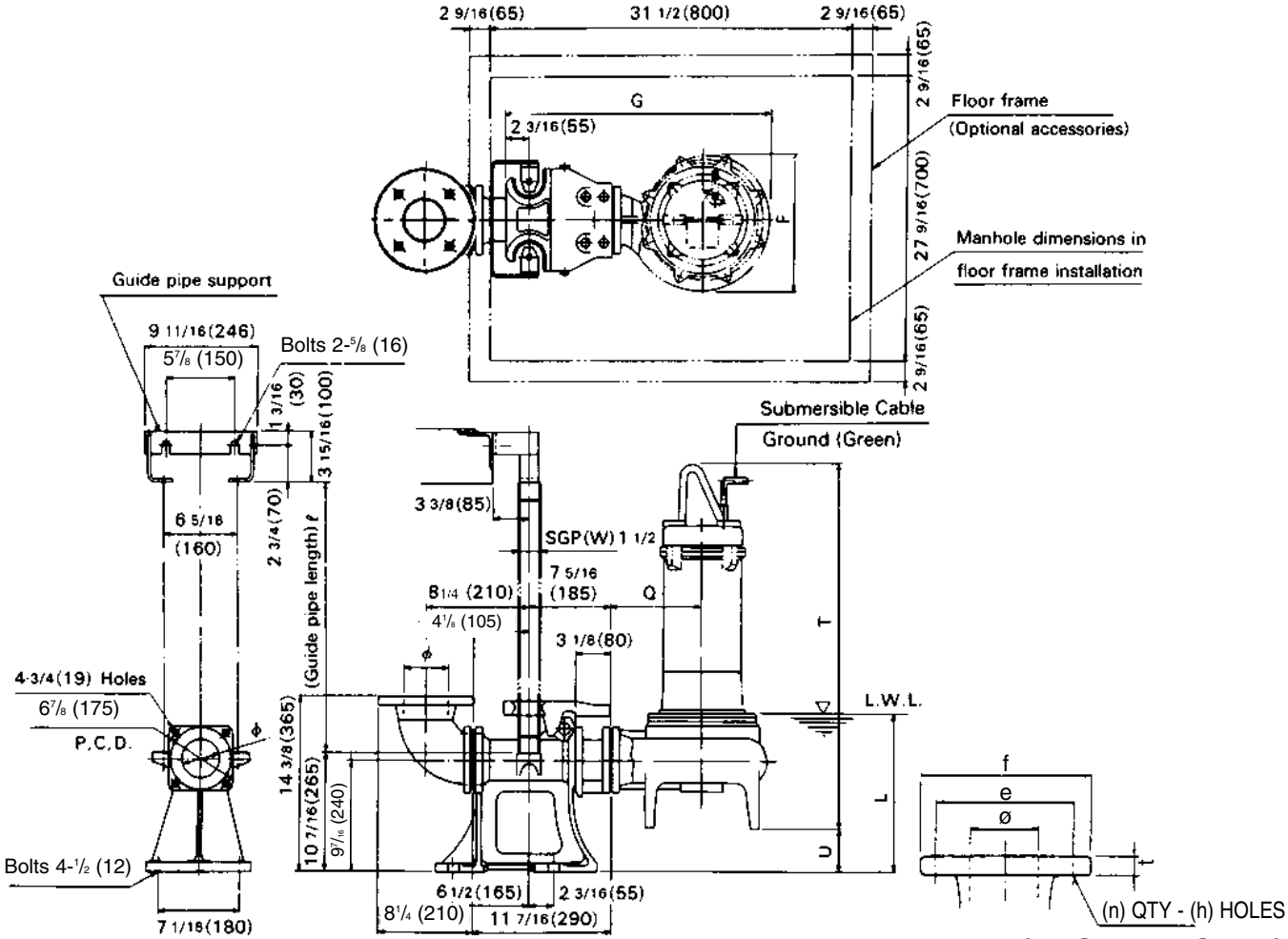

Flange (ANSI 125 PSI F.F)

inch

ø	e	f	t	n	h
3	6	7½	¾	4	¾
4	7½	9	15/16	8	¾

mm

ø	e	f	t	n	h
80	152	191	19	4	19
100	191	229	24	8	19

Dimensions: inch

PHASE	SIZE ø	PUMP MODEL	OUTPUT		QDC MODEL	PUMP & MOTOR						WEIGHT Lb	
			kW	HP		F	G	L	Q	T	U	PUMP	QDC
SINGLE	3/4	80DLU62.2S	2.2	3	LL100	13 3/16	25 3/8	12 5/8	9¼	28 3/8	4½	170	101
		80DLU63.7S	3.7	5	LL100	13 3/16	25 3/8	12 5/8	9¼	30 3/16	4½	177	101
	3/4	100DLMU63.7S	3.7	5	LL100	13 3/16	25 3/8	12 5/8	9¼	36 5/16	4½	209	101

Dimensions: mm

PHASE	SIZE ø	PUMP MODEL	OUTPUT		QDC MODEL	PUMP & MOTOR						WEIGHT kg	
			kW	HP		F	G	L	Q	T	U	PUMP	QDC
SINGLE	80/100	80DLU62.2S	2.2	3	LL100	335	644	321	235	721	115	77	46
		80DLU63.7S	3.7	5	LL100	335	644	321	235	767	115	80	46
	80/100	100DLMU63.7S	3.7	5	LL100	335	644	320	235	923	115	95	46

Model CLU

EBARA PRO Cast Sewage Pumps

Sectional View

Single Phase

1 to 5HP

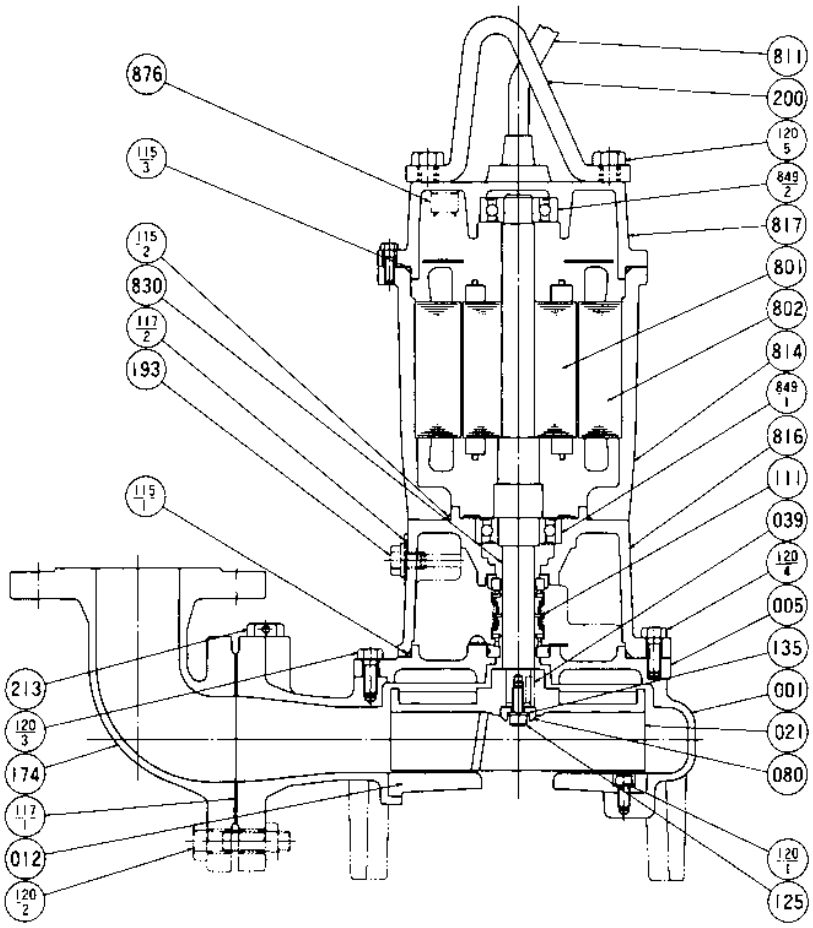

PART NO.	PART NAME	MATERIAL	ASTM, AISI CODE	NO. FOR 1 UNIT	PART NO.	PART NAME	MATERIAL	ASTM, AISI CODE	NO. FOR 1 UNIT
001	CASING	CAST IRON	A48 Class 30	1	125	BOLT	304 STAINLESS	AISI304	1
005	INTERMEDIATE CASING	CAST IRON	A48 Class 30	1	135	WASHER	304 STAINLESS	AISI304	1
012	SUCTION COVER	CAST IRON	A48 Class 30	1	174	DISCHARGE ELBOW	CAST IRON	A48 Class 30	1
021	IMPELLER	CAST IRON	A48 Class 30	1	193	OIL PLUG	316 STAINLESS	AISI316	1
039	KEY	420 STAINLESS	AISI420	1	200	LIFTING HANGER	STEEL	A283 Grade D	1
080	BUSHING	STEEL	A283 Grade D	1	213	AIR VENT VALVE	BRASS	B36 NO. 272	1
†111	MECHANICAL SEAL	—		1 SET	801	ROTOR	—		1
†115-1	O-RING	RUBBER (NBR)		1	802	STATOR	—		1
†115-2	O-RING	RUBBER (NBR)		1	811	SUBMERSIBLE CABLE	—		1
†115-3	O-RING	RUBBER (NBR)		1	814	MOTOR FRAME	CAST IRON	A48 Class 30	1
†117-1	GASKET			1	816	BRACKET	CAST IRON	A48 Class 30	1
†117-2	GASKET			1	817	BRACKET	CAST IRON	A48 Class 30	1
120-1	BOLT	304 STAINLESS	AISI304	3 or 4	830	SHAFT	403 STAINLESS	AISI403	1
120-2	BOLT	304 STAINLESS	AISI304	4	†849-1	BALL BEARING	—		1
120-3	BOLT	304 STAINLESS	AISI304	4 or 8	†849-2	BALL BEARING	—		1
120-4	BOLT	304 STAINLESS	AISI304	4	876	MOTOR PROTECTOR	—		1
120-5	BOLT	304 STAINLESS	AISI304	2					

Motors are purchased as a complete unit.
†: Recommended spare parts.

EBARA

Model CLU

EBARA PRO Cast Sewage Pumps

Sectional View

Three Phase

1 to 2HP

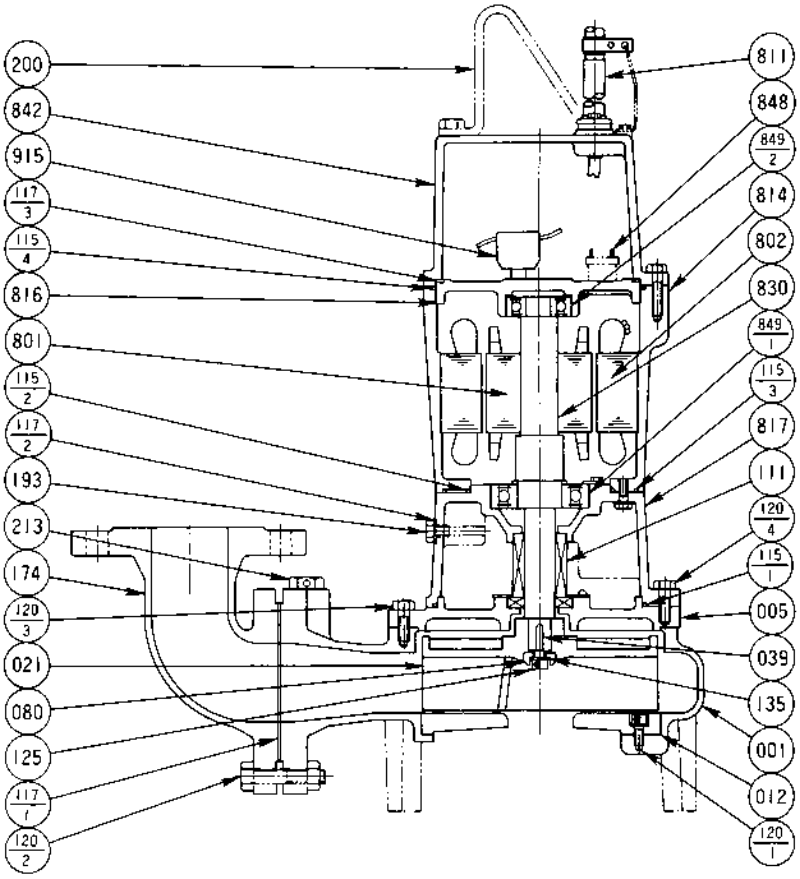

PART NO.	PART NAME	MATERIAL	ASTM, AISI CODE	NO. FOR 1 UNIT
001	CASING	CAST IRON	A48 Class 30	1
005	INTERMEDIATE CASING	CAST IRON	A48 Class 30	1
012	SUCTION COVER	CAST IRON	A48 Class 30	1
021	IMPELLER	CAST IRON	A48 Class 30	1
039	KEY	420 STAINLESS	AISI420	1
080	BUSHING	STEEL	A283 Grade D	1
†111	MECHANICAL SEAL	—		1 SET
†115-1	O-RING	RUBBER (NBR)		1
†115-2	O-RING	RUBBER (NBR)		1
†115-3	O-RING	RUBBER (NBR)		1
†115-4	O-RING	RUBBER (NBR)		1
†117-1	GASKET			1
†117-2	GASKET			1
†117-3	GASKET	RUBBER (NBR)		1
120-1	BOLT	304 STAINLESS	AISI304	3 or 4
120-2	BOLT	304 STAINLESS	AISI304	4
120-3	BOLT	304 STAINLESS	AISI304	4 or 8
120-4	BOLT	304 STAINLESS	AISI304	4

PART NO.	PART NAME	MATERIAL	ASTM, AISI CODE	NO. FOR 1 UNIT
125	BOLT	304 STAINLESS	AISI304	1
135	WASHER	304 STAINLESS	AISI304	1
174	DISCHARGE ELBOW	CAST IRON	A48 Class 30	1
193	OIL PLUG	316 STAINLESS	AISI316	1
200	LIFTING HANGER	STEEL	A283 Grade D	1
213	AIR VENT VALVE	BRASS	B36 NO. 272	1
801	ROTOR	—		1
802	STATOR	—		1
811	SUBMERSIBLE CABLE	—		1
814	MOTOR FRAME	CAST IRON	A48 Class 30	1
816	BRACKET	CAST IRON	A48 Class 30	1
817	BRACKET	CAST IRON	A48 Class 30	1
830	SHAFT	403 STAINLESS	AISI403	1
842	MOTOR COVER	CAST IRON	A48 Class 30	1
848	MOTOR PROTECTOR	—		1
†849-1	BALL BEARING	—		1
†849-2	BALL BEARING	—		1
915	EXTERNAL TERMINAL	—		1

Motors are purchased as a complete unit.
Parts No. 115-2 is not installed for 2HP
Parts No. 117-3 is not installed for 1HP
†: Recommended spare parts.